POL Mini Hex. Holed Banjo

OP. P.754 3D CAD CAD

RoHS compliant

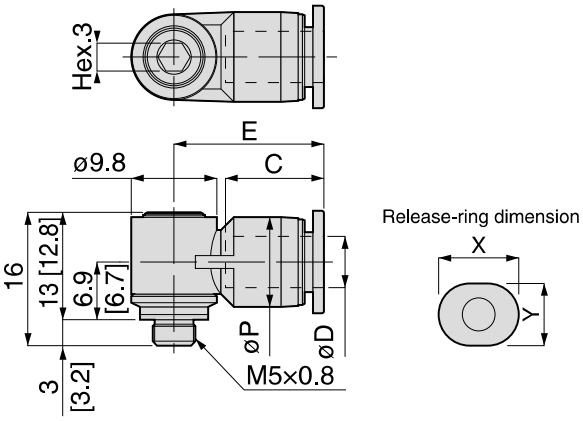

Unit：mm

Model code	Tube O.D. øD	øP	Tube end C	E	X	Y	Effective area (mm²)	Weight (g)	CAD file name(※4)
POL3-M5M④⑤	3	8	11	15.4	9.8	7.8	2.1	5	POL3-M5M
POL4-M5M④⑤	4	8	11	15.4	9.8	7.8	2.1	5	POL4-M5M
POL6-M5M④⑤	6	10.5	11.6	17.5	11.8	9.8	2.1	6	POL6-M5M
POL1/8-M5M④⑤	1/8	8	11	15.4	9.8	7.8	1.7	5	POL1'8-M5M
POL5/32-M5M④⑤	5/32	8	11	15.4	9.8	7.8	2.1	5	POL5'32-M5M

※1. ④ in Model code / Replaced with "W" for Light-gray color
※2. ⑤ in Model code / Replaced with "C" for Clean-room package
※3. Dimensions in [ ] are for clean-room package products
※4. Visit PISCO website for CAD data of clean-room package products.

POLL Mini Hex. Holed Long Banjo

OP. P.754 3D CAD CAD

RoHS compliant

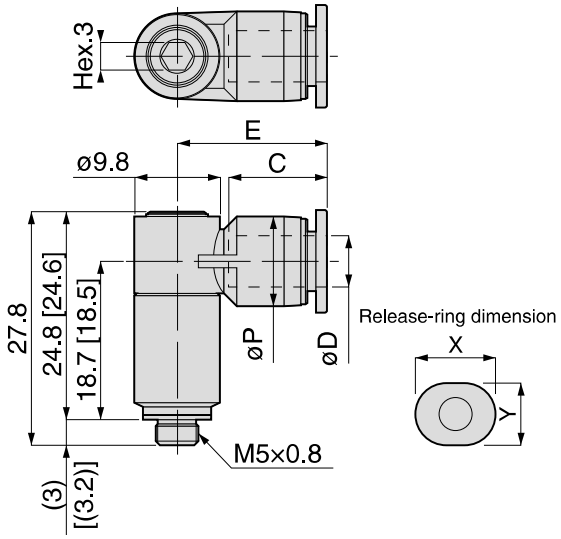

Unit：mm

Model code	Tube O.D. øD	øP	Tube end C	E	X	Y	Effective area (mm²)	Weight (g)	CAD file name(※4)
POLL3-M5M④⑤	3	8	11	15.4	9.8	7.8	2.1	11	POLL3-M5M
POLL4-M5M④⑤	4	8	11	15.4	9.8	7.8	2.1	11	POLL4-M5M
POLL6-M5M④⑤	6	10.5	11.6	17.5	11.8	9.8	2.1	13	POLL6-M5M
POLL1/8-M5M④⑤	1/8	8	11	15.4	9.8	7.8	1.7	11	POLL1/8-M5M
POLL5/32-M5M④⑤	5/32	8	11	15.4	9.8	7.8	2.1	11	POLL5/32-M5M

※1. ④ in Model code / Replaced with "W" for Light-gray color
※2. ⑤ in Model code / Replaced with "C" for Clean-room package
※3. Dimensions in [ ] are for clean-room package products
※4. Visit PISCO website for CAD data of clean-room package products.