# Specifications type KB 1..

## Single-stage (side channel blowers)

- NSK bearings with high temperature grease
- CE, UL and CSA approved
- All units are QC inspected by Klee
- Built-in bi-metal switch for 1-phase models
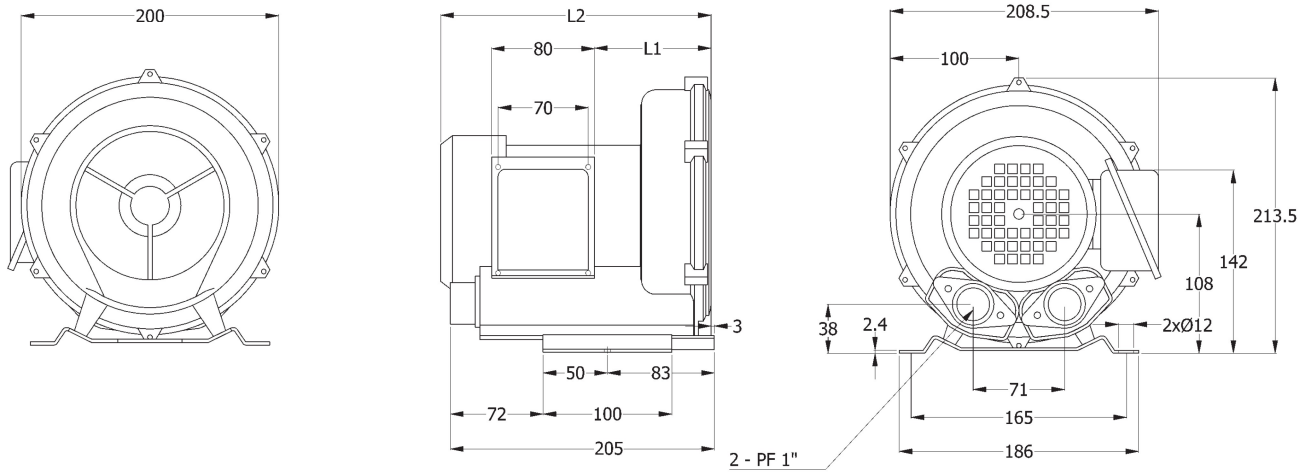
| Type no. | | KB-129 | KB-129-1 |
|---|---|---|---|
| Phases | | 3 | 1 |
| Output kW | 50 Hz | 0.20 | 0.20 |
| | 60 Hz | 0.25 | 0.25 |
| Voltage Volt | 50 Hz | 230/400 | 230 |
| | 60 Hz | 276/480 | 230 |
| Current Amp | 50 Hz | 1.2/0.69 | 1.7 |
| | 60 Hz | 1.3/0.75 | 1.8 |
| Vacuum mbar | 50 Hz | 70 | 70 |
| | 60 Hz | 75 | 75 |
| Pressure mbar | 50 Hz | 70 | 70 |
| | 60 Hz | 80 | 80 |
| Airflow $m^3$/min | 50 Hz | 0.8 | 0.8 |
| | 60 Hz | 1.0 | 1.0 |
| Insulation class | | F | F |
| L1 | | 90 | 90 |
| L2 | | 209.5 | 209.5 |
| Weight Kg | | 6.5 | 6.5 |